All dimension in:
mm [X] cm [ ] m [ ] in [ ] ft [ ]

Rev.N	Revision note	Date	Signature

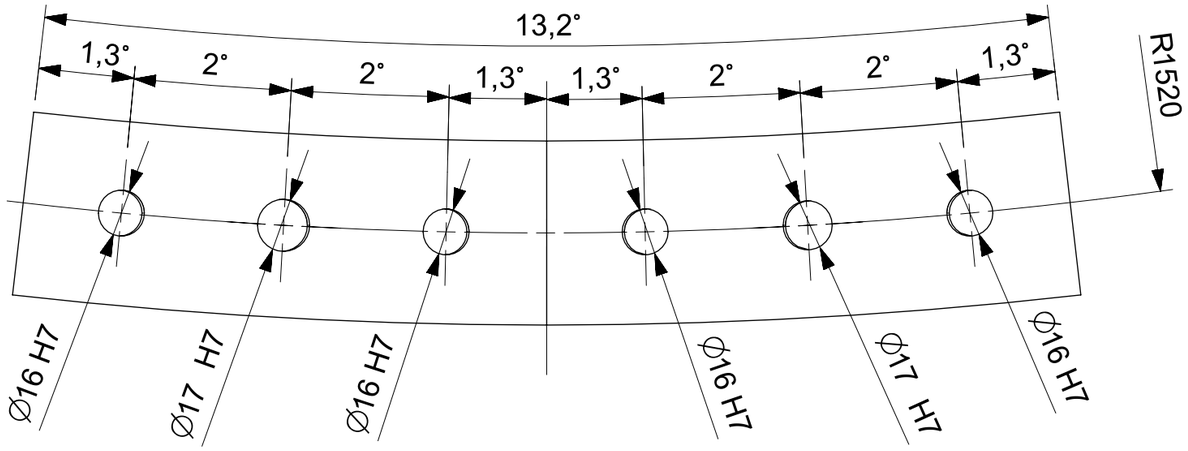

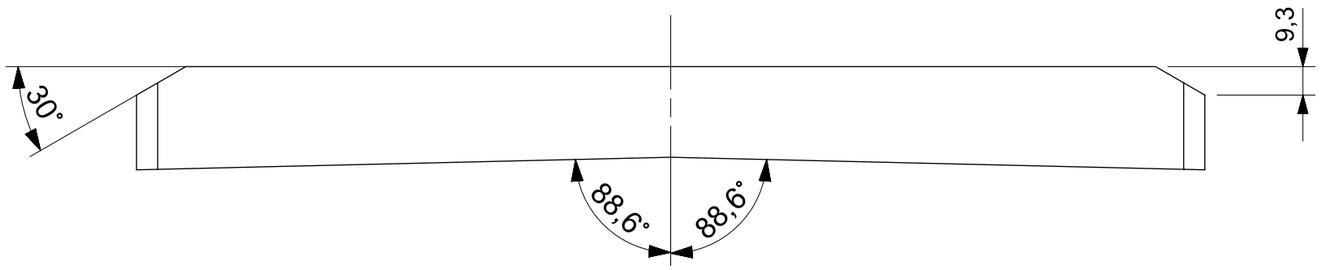

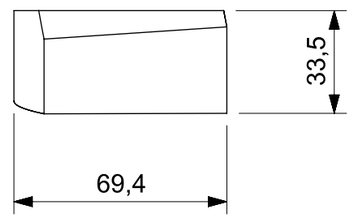

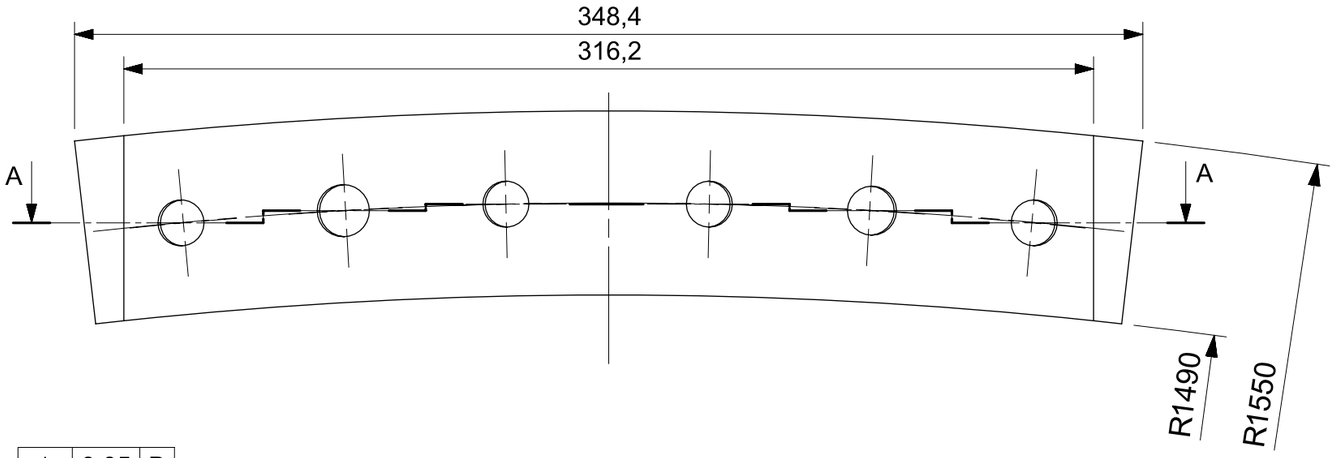

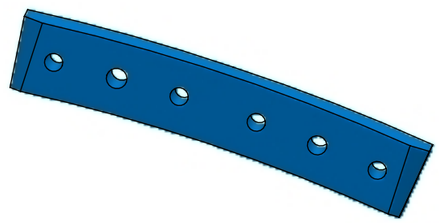

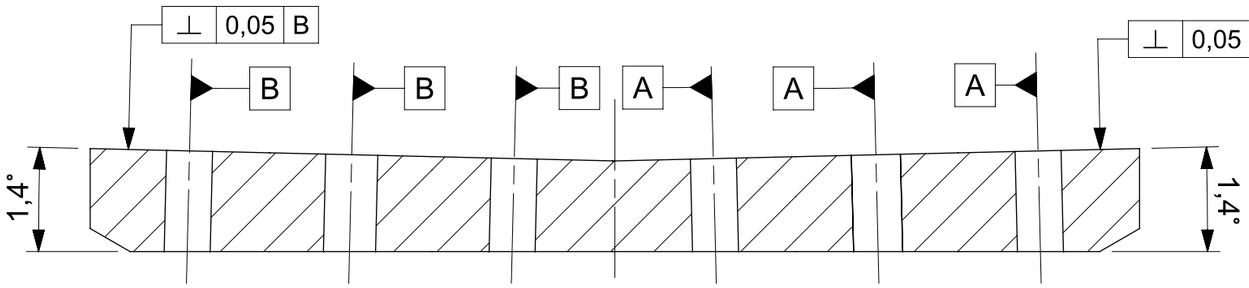

SECTION A-A

PART N.	DRAWING	MATERIAL	DENOMINATION	Q.TY
	ST0343639_01	ALLUMINIO 7075		2

Gen. Tol. for untoleranced dimension: ISO 2768-mk-E
Geometrical tolerance: ISO 8015 - E
Roughness: ISO 1302

Istituto Nazionale di Fisica Nucleare
Sezione di Ferrara

Designer
Approved

c/o Polo Tecnico-Scientifico
Blocco C - Studio 107
Via Saragat 1 - 44100 Ferrara
Tel 0532974281
e-mail: carassiti@fe.infn.it

Experiment/Project

Scale	Date	Document no.
1:2	20/11/2013	
Size	Sheet	File name
A3	Num. of Sheet	PSS004