Mesaures ar expressed in:
mm ☒ cm ☐ m ☐ in ☐ ft ☐

Rev.N	Revision note	Date	Signature

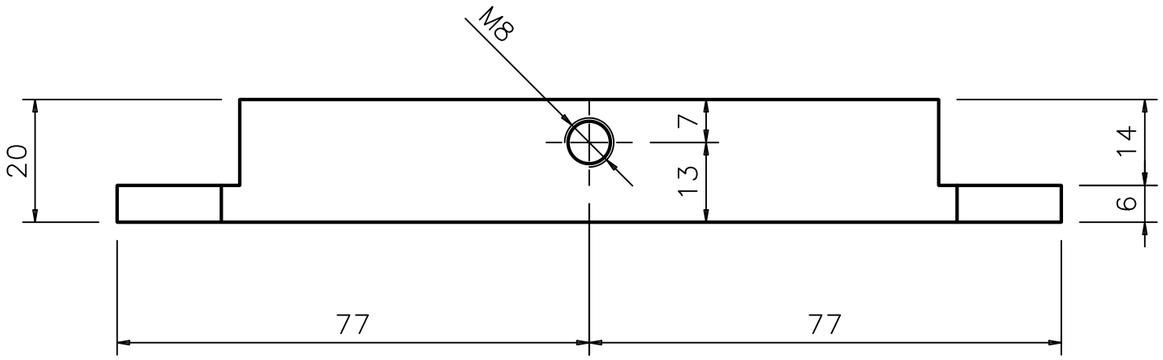

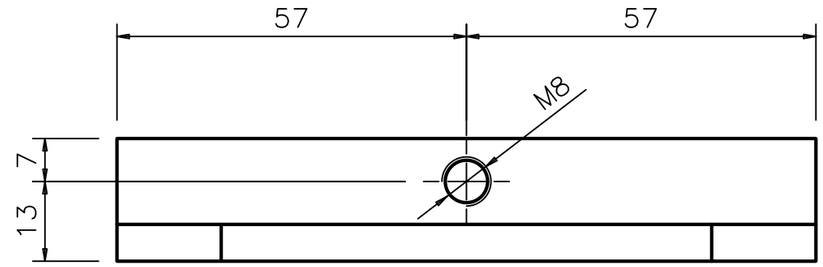

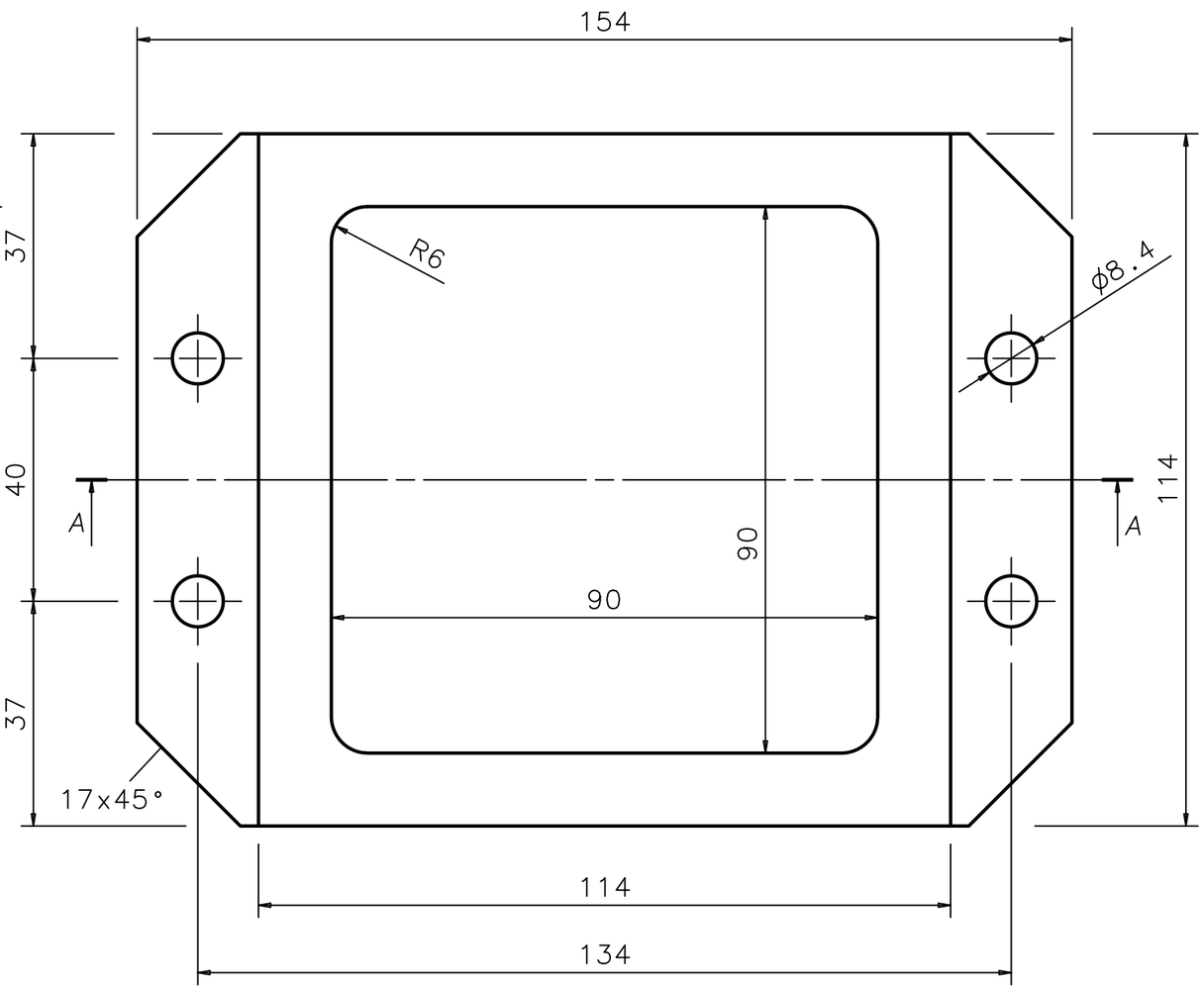

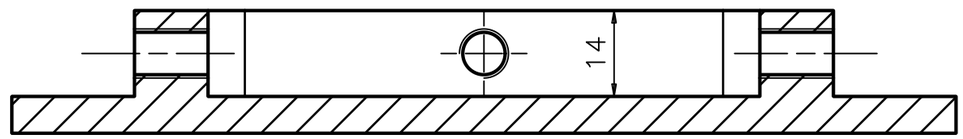

SEZ. A-A

PART N.	DRAWING	MATERIAL	DENOMINATION	Q.TY
		AISI 304	BASETTA XY	1

Gen. Tol. for untoleranced dimensions: ISO 2768-mk-E | Geometrical tolerances: ISO 8015 - E | Roughness: ISO 1302

Istituto Nazionale di Fisica Nucleare
Sezione di Ferrara

Designer: FEDERICO EVANGELISTI
Approved: FEDERICO EVANGELISTI

Via Scienze, 39
44100 - Ferrara
Tel 0532974296
e-mail: evangelisti@fe.infn.it

SPINLAB

Experiment/Project: SISTEMA XY

Scale	Date	Document no.
1:1	24/05/04	SRCC-003.1
Size: A3	Sheet / Num. of Sheet	File: SRCC0031.pdf