Mesaures ar expressed in:
mm ☒ cm ☐ m ☐ in ☐ ft ☐

Rev.N	Revision note	Date	Signature

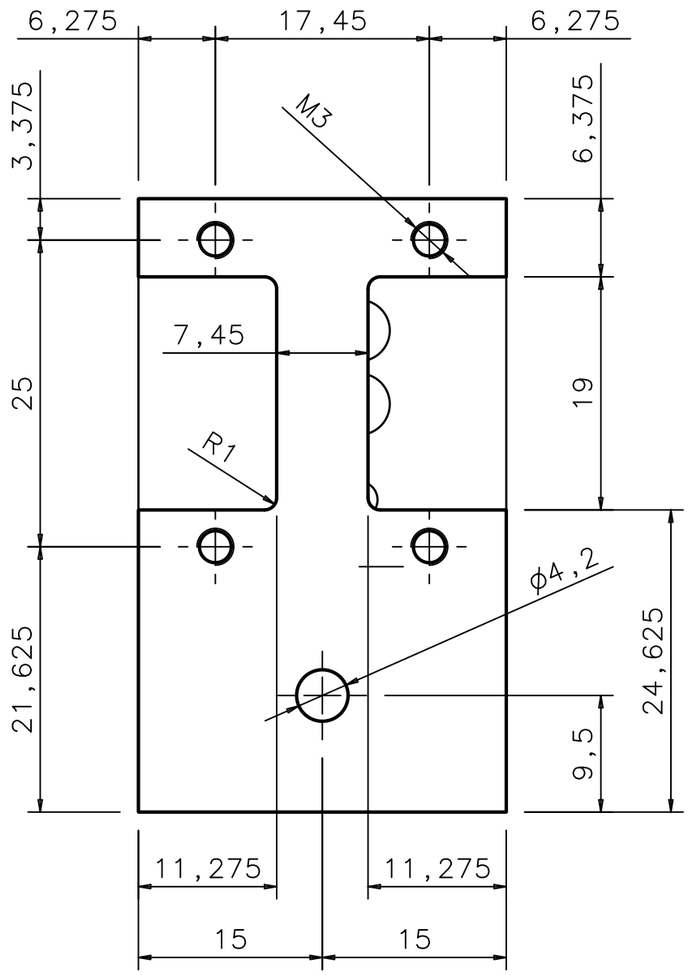

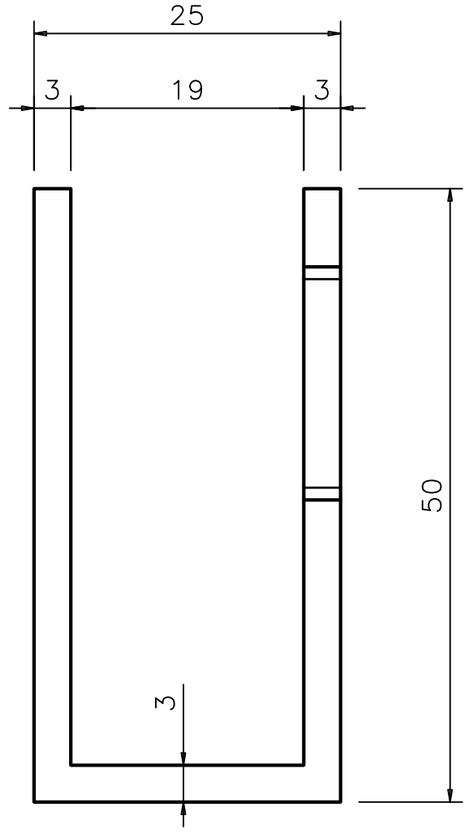

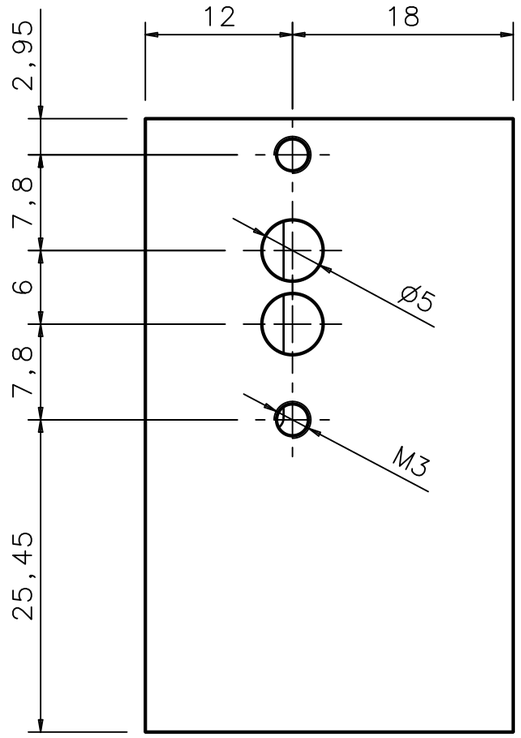

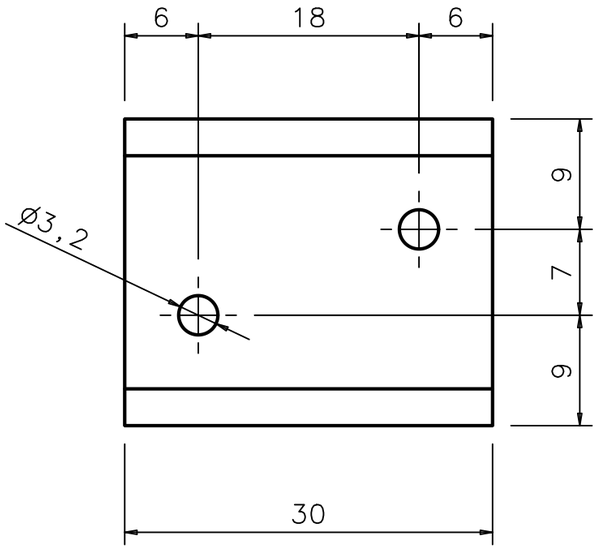

		ALLUMINIO	SUPPORTO CONNETTORI	1
PART N.	DRAWING	MATERIAL	DENOMINATION	Q.TY

Gen. Tol. for untoleranced dimensions: ISO 2768-mk-E | Geometrical tolerances: ISO 8015 - E | Roughness: ISO 1302

Istituto Nazionale di Fisica Nucleare
Sezione di Ferrara

Designer: FEDERICO EVANGELISTI
Approved: FEDERICO EVANGELISTI

Via Scienze, 39
44100 - Ferrara
Tel 0532974296
e-mail: evangelisti@fe.infn.it

SPINLAB

Experiment/Project

CHOPPER

Scale	Date	Document no.
2:1	5/04/04	CH-002
Size: A3	Sheet / Num. of Sheet	File: CH002.pdf