Mesaures ar expressed in:
mm ☒ cm ☐ m ☐ in ☐ ft ☐

Rev.N	Revision note	Date	Signature

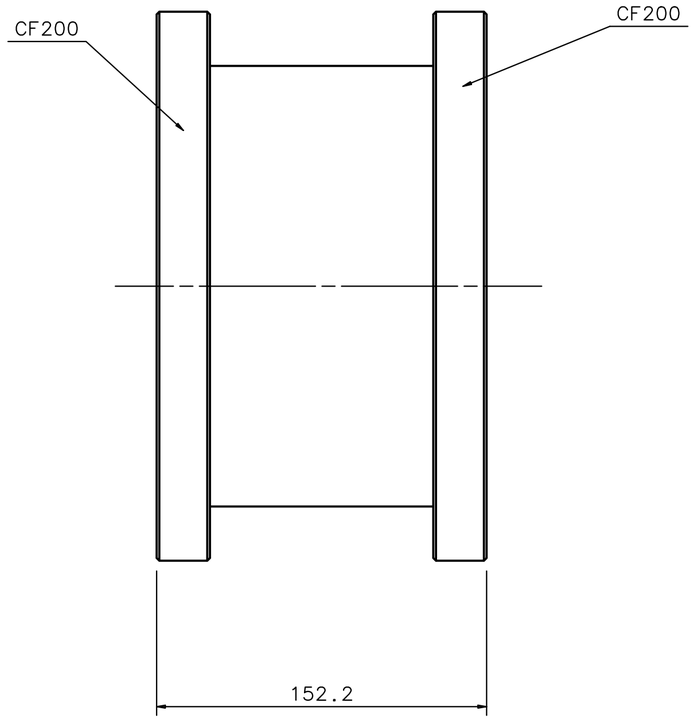

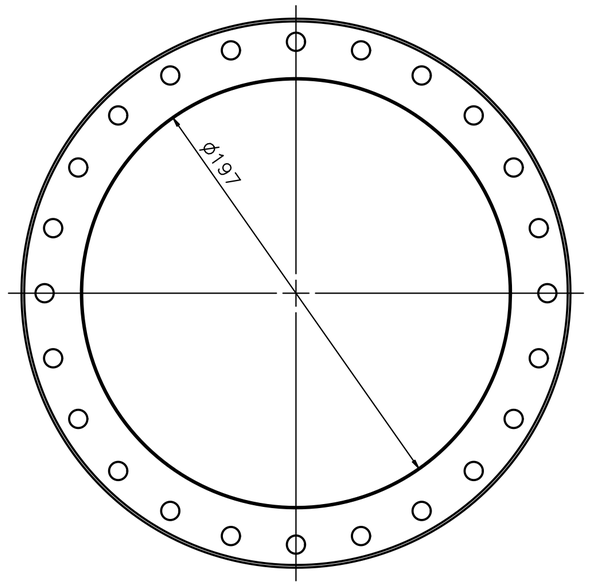

PART N.	DRAWING	MATERIAL	DENOMINATION	Q.TY
			CAMERA CHIUSURA	2

Gen. Tol. for untoleranced dimensions: ISO 2768-mk-E | Geometrical tolerances: ISO 8015 - E | Roughness: ISO 1302

Dipartimento di Fisica dell'Università di Ferrara

Designer: FEDERICO EVANGELISTI
Approved: FEDERICO EVANGELISTI

Via Scienze, 39
44100 - Ferrara
Tel 0532974296
e-mail: evangelisti@fe.infn.it

Experiment/Project: PV-LAS

Scale 1:2 | Date 24/11/08 | Size A2 | Sheet | Num. of Sheet

Document no. PL-004

File PL004.pdf