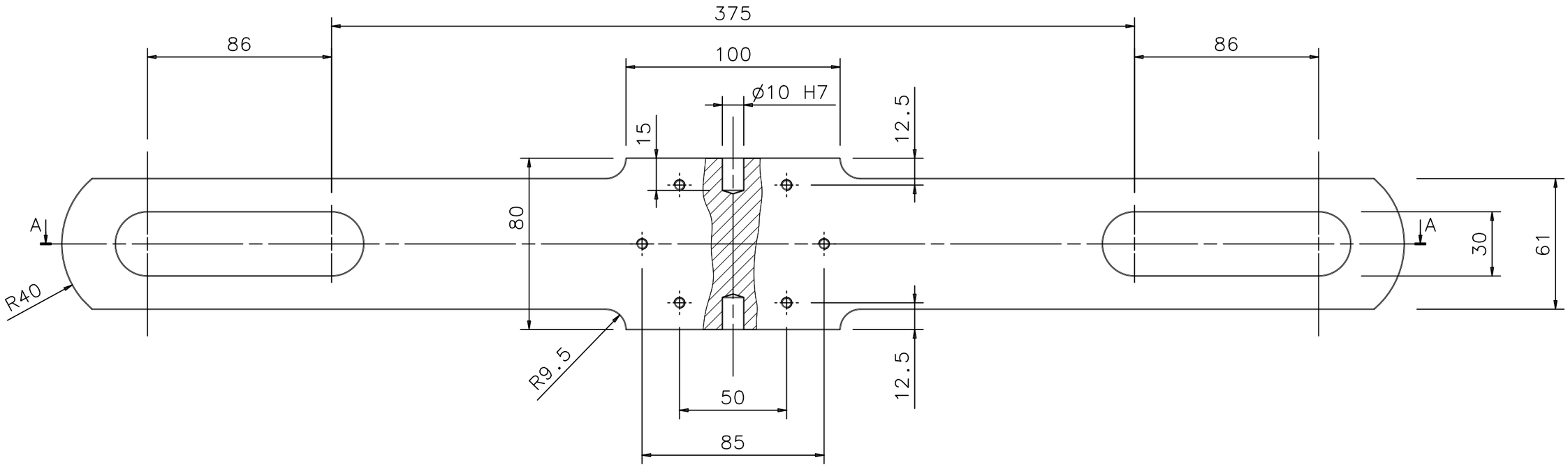

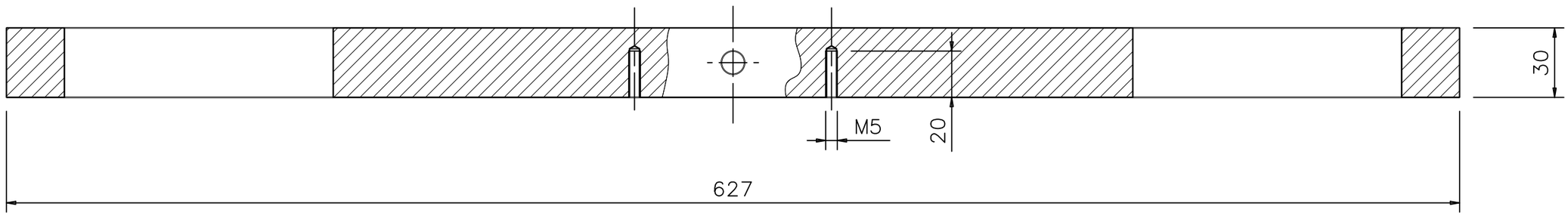

SEZ. A-A

		ERGAL	2	
ITEM	CODE	DESCRIPTION	QTY NEED	MATERIAL SPECIFIC.

NOT DIMENSIONED CHANFERS	ROUGHNESS Ra in MICROM	SURFACE A/O HEAT TREATING

	DRAWN	CHECKED	APPROVED	STANDARD VERIF.
DATE	05/02/02			
SIGNATURE				

DIMENSIONS WITHOUT TOLLERANCE SPECIFICATION
Degree of accurancy
UNI 5307

SCALE 1:2

Sezione di Ferrara
INFN
Istituto Nazionale Fisica Nucleare

TITLE
PROFILO LATERALE

DWG N. BGF-007/1

SIZE A3

MODIFICATION INDEX	
1	6
2	7
3	8
4	9
5	10