Mesaures or expressed in: mm ☒ cm ☐ m ☐ in ☐ ft ☐

Rev.N	Revision note	Date	Signature

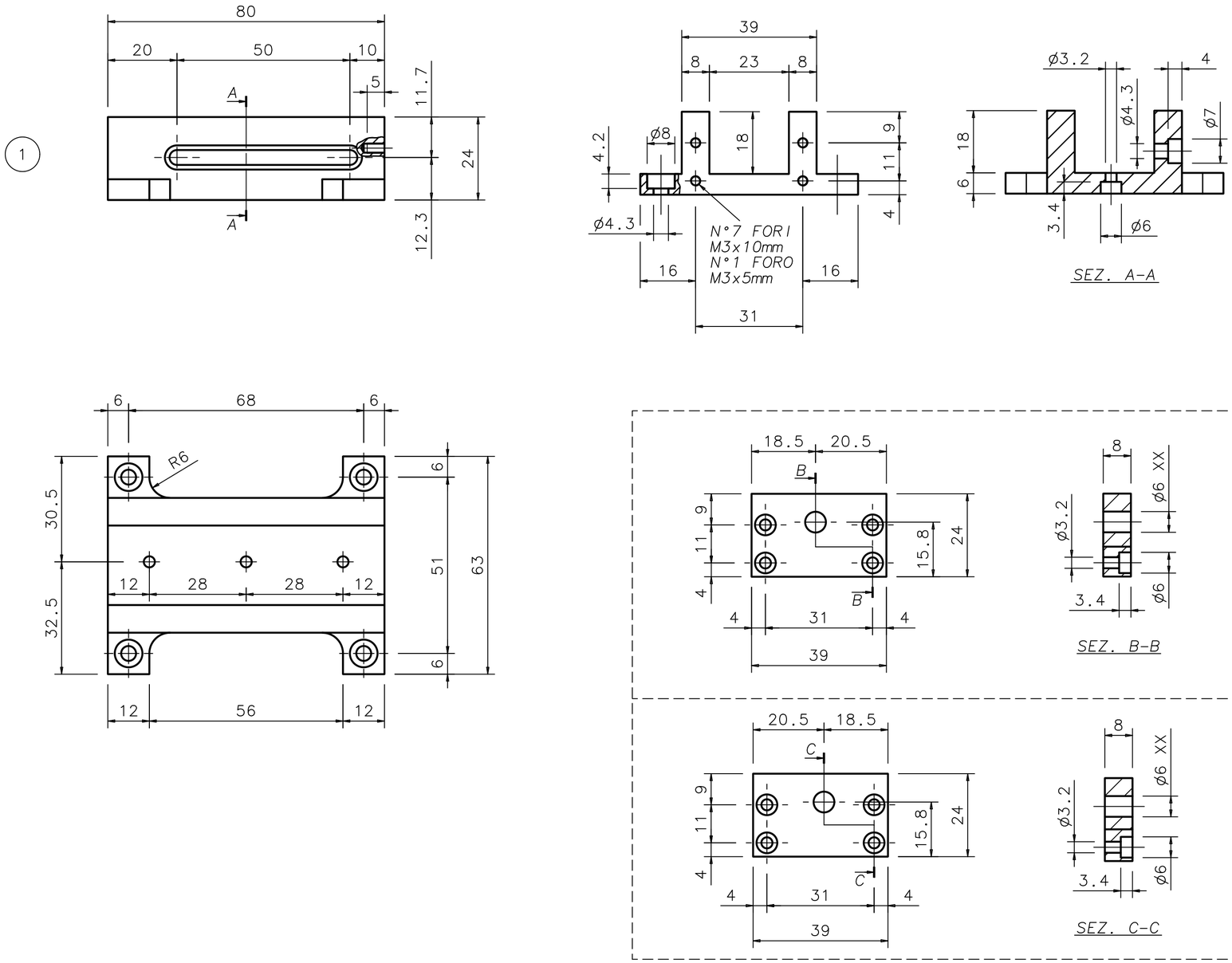

PART N.	DRAWING	MATERIAL	DENOMINATION	Q.TY
3		PVC	COPERCHIO ROTAIA TOP	1
2		PVC	COPERCHIO ROTAIA BOTTOM	1
1		PVC	SUPPORTO ROTAIA	1

Gen. Tol. for untoleranced dimensions: ISO 2768-mk-E | Geometrical tolerances: ISO 8015 - E | Roughness: ISO 1302

Istituto Nazionale di Fisica Nucleare
Sezione di Ferrara

Designer: FEDERICO EVANGELISTI
Approved: FEDERICO EVANGELISTI

Via Scienze, 39
44100 - Ferrara
Tel 0532974296
e-mail: evangelisti@fe.infn.it

Experiment/Project: LHCb

SUPPORTO + COPERCHI ROTAIA

Scale: 1:1 | Date: 23/09/03 | Size: A2 | Sheet | Num. of Sheet

Document no.: **AAC-011**

File: AAC011.pdf